KIPOR

KIPOR POWER

OPERATION MANUAL

PLEASE READ THIS MANUAL CAREFULLY.
IT CONTAINS IMPORTANT SAFETY INFORMATION.

WWW.KIPOR.COM

KIPOR

KIPOR POWER CO., LTD.
Address: Beside Jingyi Rd, Third–stage Development Section
of Wangzhuang Industry Area, Wuxi High &
New Technology Industry Development Zone.
TEL: 0086–510–85205041
FAX: 0086–510–85203796
E–MAIL: kipor@kipor.com

DIESEL GENERATOR

SINGLE-PHASE:
- KDE2200X/E/C
- KDE3500X/E/C/T
- KDE5000X/E/T
- KDE6500X/E/T
- KDE6700T/TA
- KDA6700TA/TAO

THREE-PHASE:
- KDE6500X3/E3/T3
- KDE6700T3/TA3
- KDA6700TA3/TAO3

Version 6, Printing date 15/05/2007

PREFACE

Thank you for purchasing KIPOR diesel generators.

This operation manual will tell you how to operate and service your KIPOR generation set correctly.
Please read this manual before using the generating set to ensure the proper operation.
Follow the instructions to keep your generating set in the best working condition and extend the life of it. If you have any commends or problem, please contact with our sales company or the authorized agent.
This manual deals with the general items of the KIPOR diesel generating set. However, the manual may vary with the development of the products in the future.
Please give special attentions to warnings and cautions.

WARNING

Failure to properly follow these precautions can result in property damage, serious injury or DEATH!

Read all labels and the owner's manual before operating this generator.

Operate only in well ventilated areas. Exhaust gas contains poisonous carbon monoxide, and can be deadly. Always stop engine before refueling. Wait 5 minutes before restarting.

Check for spilled fuel or leaks. Clean and/or repair before use.

Keep any sources of ignition away from fuel tank, at all times.

WARNING Indicates that the severe personal injury even death will result if the instructions are not followed.

CAUTION Indicates that the serious personal injury or equipment damage will result if the instructions are not followed.

KIPOR diesel generating set will meet your requirement if you operate it according to the manual instruction. Otherwise serious personal injury and equipment damage will result.
So, KIPOR reconfirms that you must to read and understand this manual before operating the generating set.

WARNING:

1. **TO PREVENT THE FIRE**
   Never add fuel to the fuel tank while the engine is running.
   Wipe off the overflowed fuel oil with a clean cloth. Keep explosives and other flammable products away from the generating set.

- To prevent the fire and to provide adequate ventilation, keep the generating set at least one meter away from buildings and other equipment during operation.
- Operate the generating set on a level surface.
- Do not put the generating set indoors while the engine is hot.

2. **TO PREVENT FROM INHALING THE EXHAUST**
   Exhaust gas contains poisonous carbon monoxide, which is harmful to the health. Never use the generating set at the confined places or poor ventilated locations. If it's necessary to run the generating set indoors, be sure to provide the adequate ventilation.

3. **BE CARE NOT TO BE SCALDED**
   The muffler and the engine body are very hot while the engine is running or just after running, do not touch these parts to prevent from being scalded.

4. **ELECTRIC SHOCKS, SHORT CIRCUITS**
   To avoid electric shocks or short circuits, do not touch the generating set when your hands are wet. This generating set is not waterproof, so it should not be used in a place exposed to rain snow or water sprays. Use of the generating set tor in a wet place can cause short circuits and electric shocks during operation.

- The generating set should be grounded to prevent electrical shocks from faulty appliances. Connect a length of heavy wires between the generating set s ground terminal and an external ground source.
- Do not hook up tools or other apparatus to generating set rator before it has been started. If equipment is attached, generator starting may cause sudden movements of the equipment and result in injuries and accidents. Be sure to disconnect any apparatus from the generating set or prior to starting.

⚠ CAUTION

- Most appliance motors require more than their rated wattage for start-up.
- Do not exceed the specified current limit of any socket.
- Do not connect the generating set to a household circuit. This could cause damage to the generating set and to electrical appliances in the house.

5. WHEN CHARGING THE BATTERY

Battery electrolyte contains sulfuric acid. Protect your eyes, skin and clothing. In case of contact, flush thoroughly with water and get prompt medical attention, especially if your eyes are affected.

Batteries generate hydrogen gas, which can be highly explosive. Do not smoke or allow flames or sparks near a battery, especially during charging.

Charge the battery in a fully ventilated place.

CONTENTS

1. MAIN TECHNICAL SPECIFICATIONS AND DATA

1.1 Main Technical Specifications and Data

	Item \ Model	KDE2200X KDE2200E KDE2200C		KDE3500X KDE3500E KDE3500C KDE3500T		KDE5000X KDE5000E KDE5000T		KDE6500X/E KDE6500T KDE6700T/TA KDA6700TA KDA6700TAO		KDE6500X3/E3 KDE6500T3 KDE6700T3/TA3 KDA6700TA3 KDA6700TAO3	
Generating Set	Rated frequency (Hz)	50	60	50	60	50	60	50	60	50	60
	Rated power (kVA)	1.7	2	2.8	3.3	4.2	5	4.5	5	5.5	6.3
	Rated voltage (AC) (V)	115/230	240/120	115/230	240/120	115/230	240/120	115/230	240/120	400/230	416/240
	Rated current (AC) (A)	14.8/7.4	8.3/16.7	24.4/12.2	13.8/27.5	36.5/18.3	20.8/41.7	39.2/19.6	20.8/41.7	7.9	8.7
	Rated revolution speed (r/min)	3000	3600	3000	3600	3000	3600	3000	3600	3000	3600
	Phase No.	Single phase								Three phases	
	Power factor (cos Φ)	1								0.8 (lag)	
	Excitation mode	Controlled silicon self excitation constant voltage									
	DC output	12V/8.3A								without	
	Operation mode	12 hour continuous running									
	Structure mode	C/E/X: Open frame type T: Silence type									
	Coupling method	Transmission rigid connection									
	Gross weight (kg)	C/X:53, E:60		C/X:65, E:70, T:140		X:95, E:100,T:158		X:95, E:100,T:158		X3:95, E3:105, T3:171	
	Overall dimensions (L×W×H)(mm)	C: 595×410×515 X/E: 640×480×530		C: 630×445×530 X/E: 655×480×530 T: 830×532×740		X/E:720×492×650 T:912×532×740		X/E:720×492×650 6500T: 910×532×740 6700T/TA/TAO: 915×547×742		X3/E3:720×492×650 6500T3:910×532×740 6700T3/TA3/TAO3:915×547×742	

Item \ Model		KDE2200X KDE2200E KDE2200C		KDE3500X KDE3500E KDE3500C KDE3500T		KDE5000X KDE5000E KDE5000T		KDE6500X/E KDE6500T KDE6700T/TA KDA6700TA KDA6700TAO		KDE6500X3/E3 KDE6500T3 KDE6700T3/TA3 KDA6700TA3 KDA6700TAO3	
Engine	Model	KM170FG		C/X/E:KM178FG T:KM178FGE		C/X/E:KM186FG T:KM186FGE		KM186FAG		KM186FAG	
	Type	4-stroke, single-cylinder, air-cooled, direct injection diesel engine									
	Continual output (kW/rpm)	2.5	2.8	3.7	4	5.7	6.3	5.7	6.3	5.7	6.3
	Max. Power (kW/rpm)	2.8	3.1	4	4.4	6.3	6.6	6.3	6.6	6.3	6.6
	Bore×stroke (mm)	70×55		78×62		86×70		86×72		86×72	
	Displacement (L)	0.211		0.296		0.406		0.418		0.418	
	Cooling system	Forced air-cooled system									
	Lubricating system	Pressure splashing									
	Lube oil capacity (L)	0.75		1.1		1.65		1.65		1.65	
	Starting system	C/E/X: Recoil starter E/T: Electric starter									
	Fuel oil	Diesel 0# (summer) -10# (winter) -35# (chilling)									
	Fuel oil tank volume (L)	X/E:15, C:2.5		E/X:15, C:3.5, T:16		E/X:15, T:16		E/X:15, T:16		E3/X3:15, T3:16	
	Low oil alarm system	with									

Note: A is intelligent control panel

2. CONFIGURATION

2.1 Parts name (KDE series E/X type)

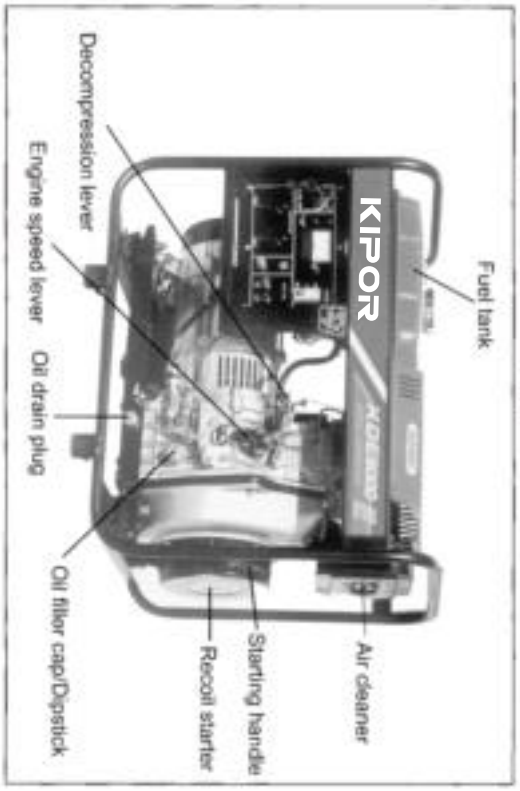

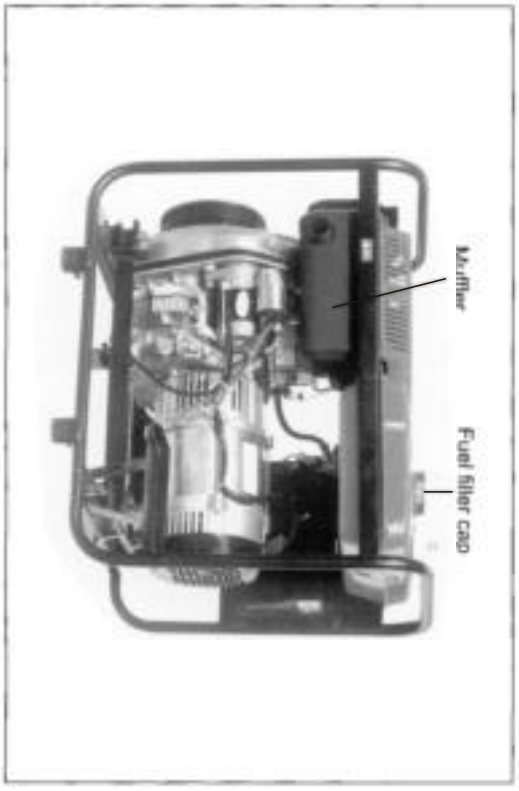

2.1 Parts name (KDE series T type)

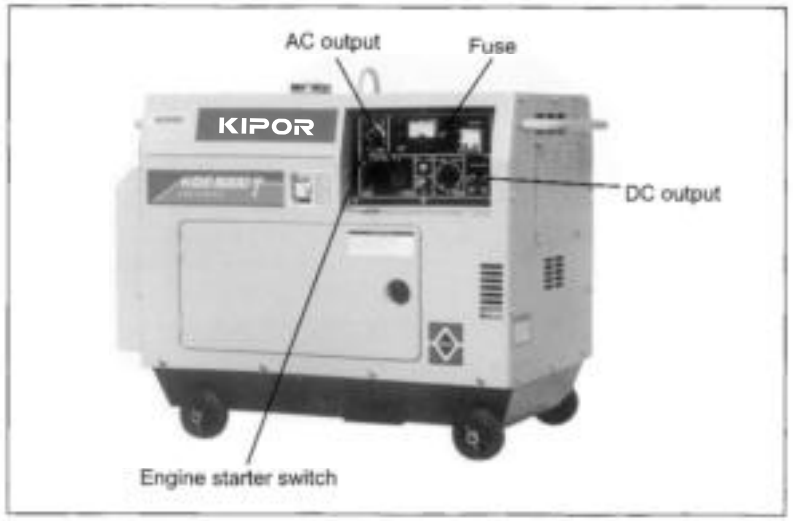

2.2 Control panel

C type panel

E type panel
E model receptacle panel

E3 type three-phase panel

EW welding panel

E type basic model panel

E type panel
A model double voltage panel

Intelligent control panel

3. PREPARATION FOR STARTING

3.1 Selection and handling of the fuel oil

■ Selection of fuel oil
Only use the light diesel, which is most suitable for the engine.

■ Keep dust and water out of the fuel
When filling the fuel tank from drums, make sure that no dust or water is mixed in the fuel. Otherwise the serious fuel injection pump and nozzle problems will result.

■ Do not overfill
Overfilling is very dangerous. Do not fill the tank beyond the top of the red plug inside the fuel oil filter.

⚠ WARNING

- Refuel in a well-ventilated area with the engine stopped.
- Do not smoke or allow flames or sparks in the area where the engine is refueled or where the fuel oil stored.
- Do not overfill the tank, make sure the filler cap is securely closed after refueling.
- Be careful not to spill fuel when refueling. If any fuel is spilled, make sure the area is dry before starting the engine.

3.2 Check and refill the engine oil

⚠ WARNING

- Always check the engine oil level with the generating set on a level surface before starting and refill if necessary.
- The engine may be damaged if operated with insufficient engine oil, it is also dangerous to refill too much engine oil as sudden increase in engine speed may be caused by its combustion.

⚠ CAUTION:

KIPOR KDE series generating set are equipped with low oil warning system. This system will stops the engine automatically when the oil level falls below the lower level. This prevents accidents such as bearing seizures, etc.

■ Select the most applicable engine oil
It is very important to select the applicable engine oil for keep up the performance and life of the generating set. If inferior engine oil is used, or if your engine oil is not replaced periodically, the risk of piston seizure, piston ring sticking and accelerated wear of the cylinder liner, bearing and other moving components increases significantly. So the generating set life will be shortened. KIPOR recommends CC/CD oil classified by API. Choose the applicable viscosity oil according to the local ambient temperature.

3.3 Service the air cleaner

1. Screw off the wing nut, remove the air cleaner cover and take out the element.

X/E type

⚠ CAUTION:

- Do not wash the element with detergent.
- Replace the element when its output decrease or a bad exhaust color is noticed.
- Never run the generating set without the element, otherwise the rapid engine wear will result.

T type

2. Reattach the air cleaner cover and screw on the wing nut.

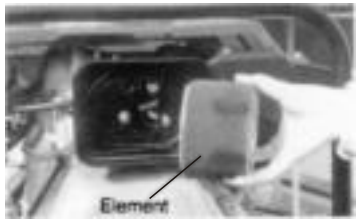

3.4 Check the generating set

1. Turn off the main switch and any other loads.

⚠ WARNING:

- Be sure to turn off the main switch before starting.
- The generating set should be earthed to prevent electric shocks.

⚠ WARNING:

- The generating set should be earthed to prevent electric shocks.

2. Handling of dual voltage type generating sets
   Be sure to place the changeover switch in the correct position for the rated voltage of the working instrument.

⚠ CAUTION

- The main switch should always be kept in the "ON" position during operation.
- Before starting the engine, be sure to turn the switches of the working instrument (lighting apparatus, motor, etc.) to their "OFF" position. If the switches are not "OFF", the sudden application of load when the engine is started could be very dangerous.

3-5 How to open the cabinet door and covers of KIPOR LDE series generating set

1. Open the cabinet door for daily inspection. Turn the lever counterclockwise and raise the door.
2. Loosen the bolt of the air cleaner check port cover to check the air cleaner.
3. Screw off the wing nut to open the cover, then check the nozzle cover.

3.6 Break-in period operation

The first 20hrs are the break-in period of the engine, the operator must obey to following items:

- Warm up the engine 5 minutes after the initial starting. Run the engine at low speed and zero load before the engine becomes warm.

- Avoid applying any heavy loads during the break-in period. KIPOR recommends to run the engine at 3000r/min with 50% load in break-in period.
  Replace the engine oil on time.
- Replace the engine oil while the engine is warm after 20-hours -running, the old engine oil will be drained out completely.

4. START THE GENERATING SET

⚠ WARNING

- Do not hook up tools or other apparatus to the generating set before starting.

4-1 Recoil starting

Start the engine according to the following procedures:

1. Open the fuel cock.

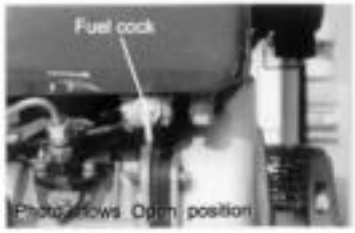

2. Set the engine speed lever at the RUN position.

3. Pull out the recoil starter handle.

- Pull out the handle until you feel the resistance, then return it back to the initial position.
- Press down the decompression lever. It will return automatically when the recoil starter is pulled.
- Pull out the recoil starter handle briskly with both hands.

⚠ CAUTION

- Do not allow the handle grip to snap back against the engine. Return it gently to prevent damage to the starter.
- When the engine is difficult to start in cold weather, remove the screw plug from the cylinder head cover and add 2cc engine oil.

⚠ CAUTION

- Always screw on the screw plug on the cylinder head cover except filling, to prevent the rain and dirty flowing into the engine body. Otherwise the quick wear of the internal parts and other serious problems will result.


① Open the fuel cock
② Put the engine speed lever in the "RUN" position
③ Hold the starting handle properly
Pull the starting handle slowly ---
---until you feel resistance
④ Push the decompression lever down and release.
Then return it slowly
⑤ ▲ Pull the rope hard and fast. Pull it all the way out. Use two hands if necessary
Hold the starting handle firmly
⑥ Start!
If the engine doesn't start try again from
KIPOR

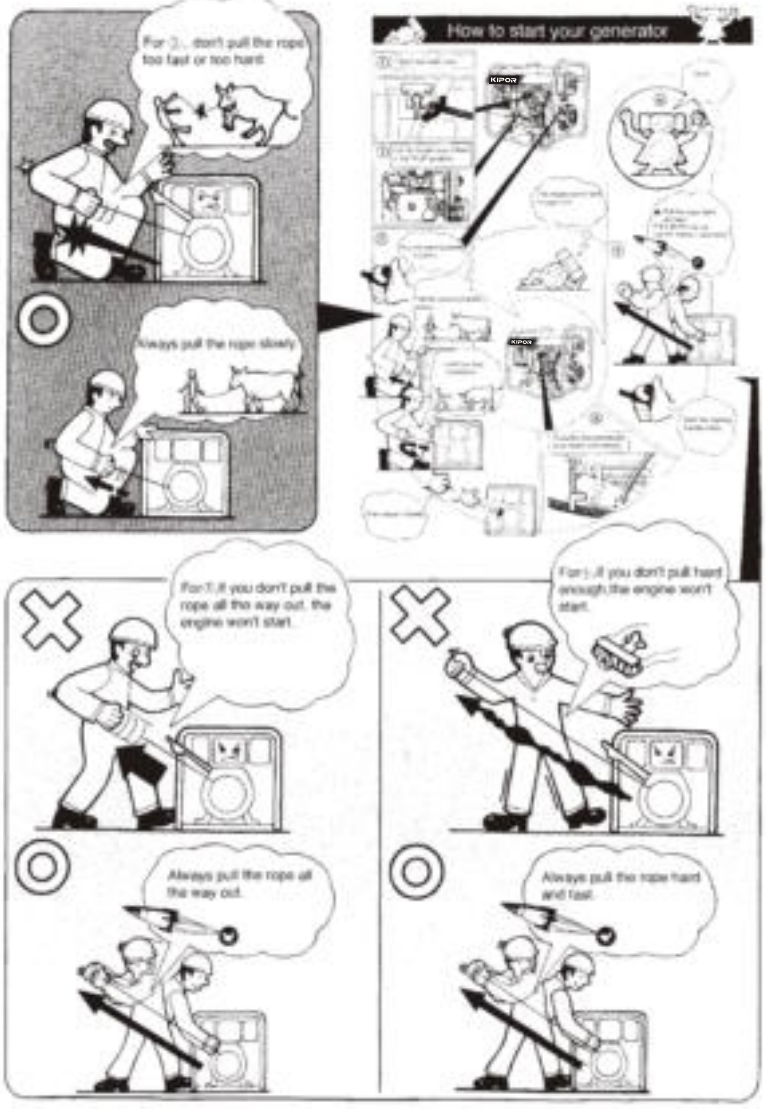
How to start your generator
For ②, don't pull the rope too fast or too hard.
Always pull the rope slowly.
For①, if you don't pull the rope all the way out, the engine won't start.
Always pull the rope all the way out.
For②, if you don't pull hard enough the engine won't start.
Always pull the rope hard and fast.
KIPOR

4.2 Electric starting

1. Starting (The preparations for electric starting are the same as for the recoil starting.)

■ Open the fuel cock.

■ Set the engine speed lever at "RUN" position.

■ Turn the starting key clockwise to "START" position.
Remove your hand from the key as soon as the engine starts.
If the starting motor does not start after 10 seconds, wait 15 seconds before starting it again.

⚠ CAUTION

■ Run the starting motor for long time will cost the battery power greatly even burn out the motor.

■ Always leave the starting key at "ON" position while the engine is running.

2. Battery
Check the battery electrolyte level every month. Refill the distilled water until the upper limits if the electrolyte dropped to the lower limits.

⚠ CAUTION

■ If the electrolyte level is too low, the engine may fail to start because there is not sufficient power. On the other side, if the electrolyte level is too high, the fluid will corrode the surrounding parts. Do keep the electrolyte level between the upper and lower limits.

5. OPERATE THE GENERATING SET

5.1 Operate the generating set

1. Warm up the engine without load three minutes.

2. Concerning the generating set with Low Oil Warning System, check that the Oil Alarm Lamp is not lit.

⚠ CAUTION

- For the generating set with Low Oil Warning System, the Oil Alarm Lamp will activated by low oil pressure or engine oil shortage, simultaneously, the engine will stop. The engine will stop immediately if restarted without refilling the engine oil. Check the oil level and refill.
- Do not loosen or readjust either the engine speed limiting bolt or fuel injection limiting bolt, otherwise, the performance will be affected.

5.2 Checks during the running

1. Whether there is abnormal sound or vibration;
2. Whether the engine misfires or runs rough;
3. Check the color of the exhaust. (Is it black or too white?)
   If you notice any of the above-mentioned phenomenon happened, stop the engine and find out the fault cause or contact with KIPOR agent.

⚠ CAUTION

- If the engine has been running, the muffler will be very hot. Be careful not to touch the muffler.
- Never refill the fuel tank while the engine is running.

6. LOAD

⚠ CAUTION

- Do not start 2 or more machines simultaneously. Start them one by one.
- Do not use floodlights together with other machines.

6.1 AC application

1. Be sure to run the generating set at rated speed, otherwise AVR(Automatic Voltage Regulator) will produce the forced excitation. If the running is for a long time under such condition, AVR will be burned out.
2. After switching on the air switch, observe the voltmeter on the panel of the control cabinet, the voltmeter should point to 230V ± 5%(50Hz) for single-phase generating set; 400V ± 5%(50Hz) for three-phase generating set, then the loading can be carried out.
3. When the double voltage generating set changes over the voltage, the air switch should be set at "OFF" position. Otherwise the generating set and electric devices will be burned out and damaged.
4. Connect the equipment to the generating set in order. For the matter of the motor load, firstly the heavy-duty motor should be connected, then the light-duty motors. If the operation is false, the generating set will lag or stop suddenly. It is necessary to unload the generating set immediately and turn off the main switch and do checks.
5. Three-phase generating set

- Balance three phases during the operation. Stop the engine for check if the tolerance exceed 20%. Be sure to keep the tolerance among three phases less than 20%.
- The load for each phase must below the rated load as well as the current must less than rated current.
  A,B,C,D(or U, V, W, N) phase arrangement should be from left to right, or clockwise.
- Concerning starting the three phase asynchronous motors, first start the heavy-duty motors, then start the light-duty motors.

⚠ NOTE

- If overloading of the circuit trips the AC circuit protector, reduce the electrical load on the circuit, and wait a few minutes before resuming operation.

6.2 DC application

1. DC terminals are only for charging 12V battery.
2. Set the air switch at "OFF" position while charging. On the 12V output terminals, a charge switch can be connected so the switch can be used for on-and-off purpose.
3. Concerning the automatic type battery with the leads, be sure to disconnect the negative leads of the battery while charging.

⚠ CAUTION

- Connect the positive and negative poles of the battery with the positive and negative poles of DC terminals separately. Do not confuse them, otherwise the battery and generating set will burn out.
- Do not connect the positive pole of the battery with its negative pole, otherwise the battery damage will result.
- Do not connect the positive pole of the DC terminal with its negative pole, otherwise the generating set damage will result.
- When a large capacity battery is charged, excessive current flows, the fuse for the direct current will burn out.
- Do not run the generating set while it is still connected with the battery.
- Do not use DC12V and AC at the same time.

⚠ CAUTION

- Battery exhausts explosive gas. Keep sparks, flames, and cigarettes away form the battery. To prevent from creating a spark near the battery, always connect the charging cables to the battery first and only then to the generating set. When disconnecting, you should disconnect the cables at the generating set first.
- Charge the battery at a well-ventilated place.
- Before charging, remove the cap from each cell of the battery.
- Stop charging if the electrolyte temperature exceed 45℃.

6.3 Electrical appliance particularly motor-driven equipment will produce very high current while starting, the below table provides the reference for connecting these apparatus to the generator set.

TYPE	WATTAGE		TYPICAL APPLIANCE	EXAMPLE		
	STARTING	RATED		APPLIANCE	STARTING	RATED
· Incandescent lamp · Heating appliance	X1	X1	Incandescent lamp TV	Incandescent lamp 100W	100VA (W)	100VA (W)
· Fluorescent lamp	X2	X1.5	Fluorescent lamp	40W Fluorescent lamp	80VA (W)	60VA (W)
· Motor-driven equipment	X3~5	X2	Refrigerator Electric fan	Refrigerator 150W	450-750VA (W)	300VA

7.STOP YOUR GENERATING SET

1. Disconnect the load from the generating set.
2. Turn off the air switch of the generating set.
3. Set the speed lever at "RUN" position, run the generating set without load for about 3 minutes. Do not stop the engine suddenly, otherwise the temperature will increase abnormally, the nozzle will blocked and the generating set will be damaged.

- Press down the stop lever.
- Concerning the electric starter, turn the key to "OFF".
- Turn the fuel cock lever to "S" position.
- Pull out the recoil starter handle until you feel resistance (at this position, both intake/exhaust valve are closed.) and leave the handle in this position. This prevents the engine from rust.

⚠ WARNING

- If the engine keep on running even after the speed lever is placed at the "STOP" position, either turn the fuel cock to the "CLOSE" position or loosen the nut of high pressure fuel pipe on the pump side to stop the engine.
- Do not stop the engine with the decompression lever.
- Do not stop the generating set with load. Stop it after the load removed.

8. PERIODIC CHECK AND SERVICE

Periodic check and service are very important for keeping the engine in good condition and durable. The chart below indicates what checks to make and when to make them.

⚠ WARNING

- Shut off the engine before performing any service. If the engine must be run, make sure the area is well ventilated. The exhaust contains poisonous carbon monoxide gas.
- After the generating set has been used, clean it immediately with a cloth to prevent corrosion and to remove sediment.

Item \ Interals	Every day	First month or 20 Hrs	Third month or 100 Hrs	sixth month or 500 Hrs	Every year or 1000 Hrs
Check and refill fuel oil	○				
Drain out fuel oil		○			
Check and refill engine oil	○				
Check for oil leakage	○				
Check and tighten fastening parts	○			● Tighten the cylinder head bolts	
Replace engine oil		○ (First time)	○ (Second time)		
Clean engine oil filter				○(Replace if necessary)	
Replace air cleaner element	(Service more frequently when used in dusty areas)			○ (Replace)	
Clean fuel oil filter				○	● (Replace)
Check fuel injection pump				●	
Check nozzle				●	
Check fuel pipe				● (Replace if necessary)	
Adjust clearance of intake/exhaust valves		● Fisrt time)		●	
Grind intake/exhaust valves					●
Replace piston ring					●
Check battery electrolyte	Every month				
Check carbon brush and slip ring				●	
Check insulation resistance	The generating set has been stored more than 10days ○				

Note: "○" indicates that special tools are required, please contact with KIPOR agent.

8.1 Replace engine oil

Remove the oil filler cap. Remove the drain plug and drain the old oil while the engine is still warm. The plug is located on the bottom of the cylinder block. Tighten the drain plug and refill with the recommended oil.

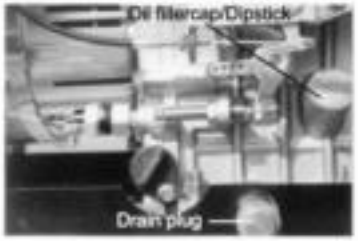

8.2 Clean the engine oil filter

Cleaning time	Every 6 months or 500 hours
Replace if necessary	

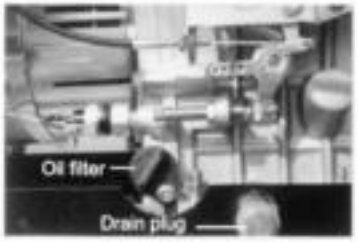

8.3 Replace the air cleaner element

Do not clean the air cleaner element with detergent.

Replace time	Every 6 months or 500 hours

⚠ CAUTION

- Never run the engine without the element or with a defective element.

8.4 Clean and replace fuel oil filter

The fuel oil filter also has to be cleaned regularly to insure maximum engine output.

Clean time	Every 6 months or 500 hrs
Replace time	Every year or 1000 hrs

1. Drain out the fuel from the fuel tank.

2. Drain out the fuel from the fuel tank. Screw off the small screw of the fuel cock and pull out the filter from the filler port.
3. Wash the filter thoroughly with diesel fuel. Loosen the fastening nut, bottom cover and delivery discs for cleaning the deposit carbon.

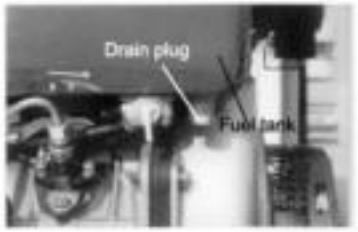

8.5 Tighten cylinder head bolt

Tightening the cylinder head bolt requires a special tool. Do not try yourself. Contact with KIPOR agent.

8.6 Check the injection nozzle and fuel injection pump

1. Adjust the clearance of the intake/exhaust valves.
2. Grind the intake/exhaust valves.
3. Replace the piston ring.

All these operation require special tools and skills, contact with your KIPOR agent.

⚠ WARNING

- Do not perform the injection nozzle test near an open fire or any other kind of fire. The fuel spray may ignite. Do not expose bare skin to the fuel spray. The fuel may penetrate the skin and cause injury to the body. Always keep your body away from the nozzle.

8.7 Check and refill the battery electrolyte and charge the battery

The diesel uses a 12V battery. Battery electrolyte will be lost through continuous charging and discharging.
Before starting, check for physical damage to the battery and also the electrolyte levels, and refill the distilled water till to the upper level if necessary. When actual damage is discovered, replace the battery.
Check the battery electrolyte monthly.

⚠ WARNING

- The battery electrolyte contains sulfuric acid. Protect your eyes, skin and clothing. In case of contact, flush thoroughly with water and get prompt medical attention, especially if yur eyes are affected.
- The battery exhaust hydrogen gas, which can be highly explosive. Do not smoke or allow flames or sparks near the battery, especially during charging.

8.8 Check the generating set carbon brush and slip ring

Often check the generating set carbon brush and slip ring. Readjust if there is spark.

9. LONG-TERM STORAGE

If store the generating set for long periods, make the following preparations.

1. Operate the engine for about 3 minutes and then stop.
2. Stop the engine. Drain the engine oil while the engine is still warm and fill with fresh oil.
3. Remove the screw plug on the cylinder head cover and refill 2cc engine oil, then put the plug in place.
4. ■Recoil starting:
   Push the decompression lever down (Non-compression position) and hold it while you pull the recoil starter2~3 times.(Do not start the engine.)
   ■Electric starting:
   Turn the engine 2~3 seconds with the decompression lever set at the non-compression position, and the starting key at the "START" position.((Do not start the engine.)
5. Pull the decompression lever up. Pull the recoil starter slowly. Stop when you feel resistance.(at this position, both intake/exhaust valves are closed to prevent the engine from the rust.)
6. Wipe off the oil and dirt from the engine and store in a dry place.

10.TROUBLESHOOTING AND REMEDY

	Fault Cause	Remedy
The diesel engine can not start	Fuel oil is not sufficient	Refill the fuel oil
	Fuel cock is not at START position	Turn it to START position
	Fuel injection pump and nozzle do not delivery the fuel or delivery insufficient fuel.	Remove the nozzle and repair it at test table.
	The governor lever is not at START position.	Set the lever to START position
	Check the engine oil level.	The specified oil level should be between the upper level and lower level.
	The nozzle has dirty.	Clean the nozzle
	The speed and force to pull the recoil starter are not enough.	Start the engine according to the start procedures included in this book.
	The battery has no electricity.	Charge it or replace it with a new one.
The generating set can not generate	Main switch not be turned on.	Turn the main switch to ON position.
	The carbon brush already worn.	Replace the carbon brush.
	The contact of the socket is not good.	Adjust the socket.
	The rated speed can not attached.	Adjust it according to the requirements.
	AVR is damaged.	Replace the AVR.

Electric Wiring Diagram for All Types of the Set

<1> C type electric wiring diagram

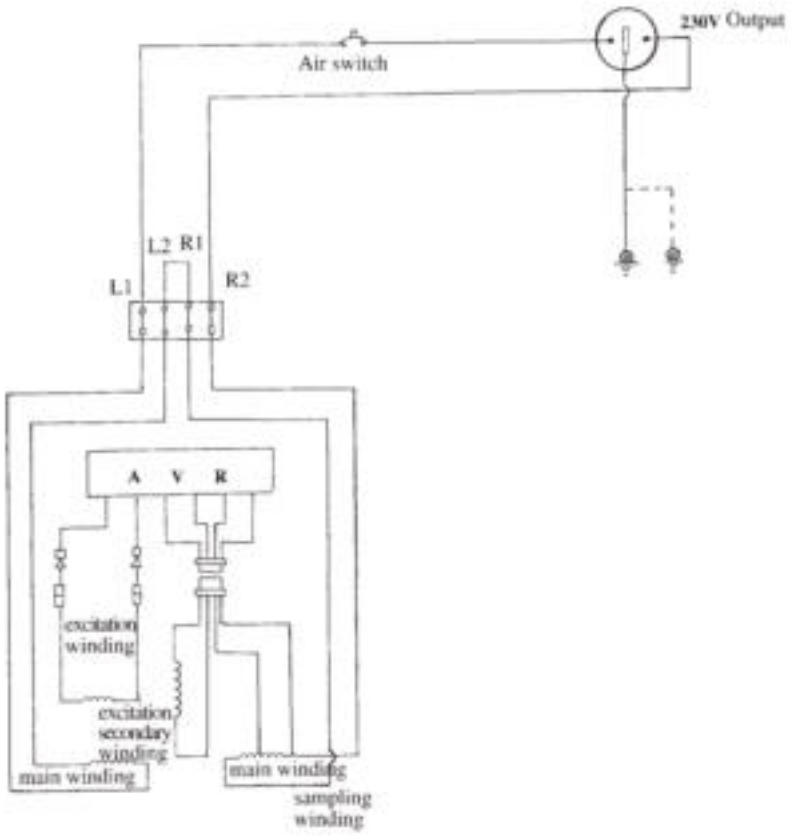

<2>X type electric wiring diagram (single voltage output)

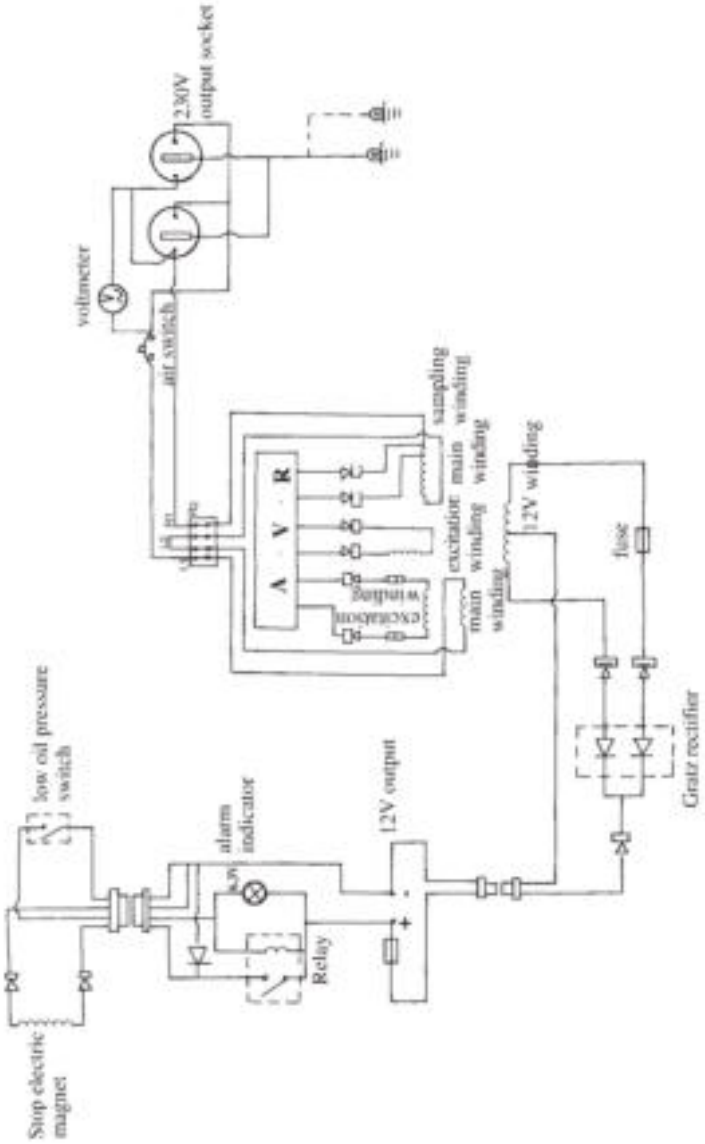

<3> X type electric wiring diagram (double voltage output)

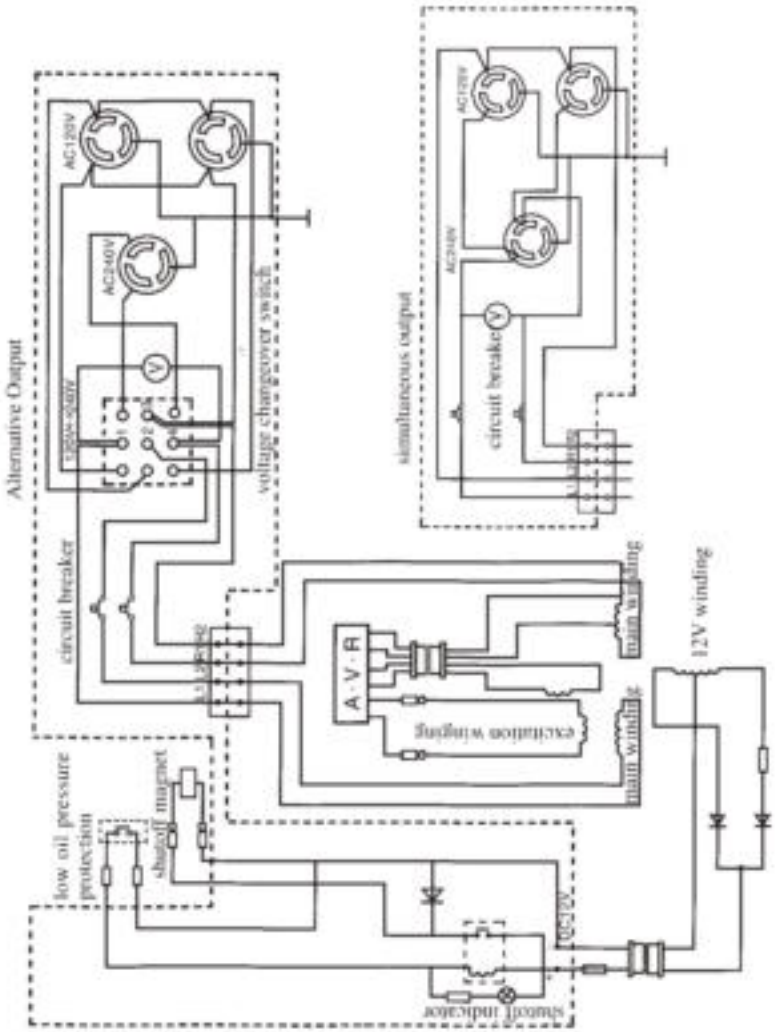

<4> E type electric wiring diagram (single voltage output)

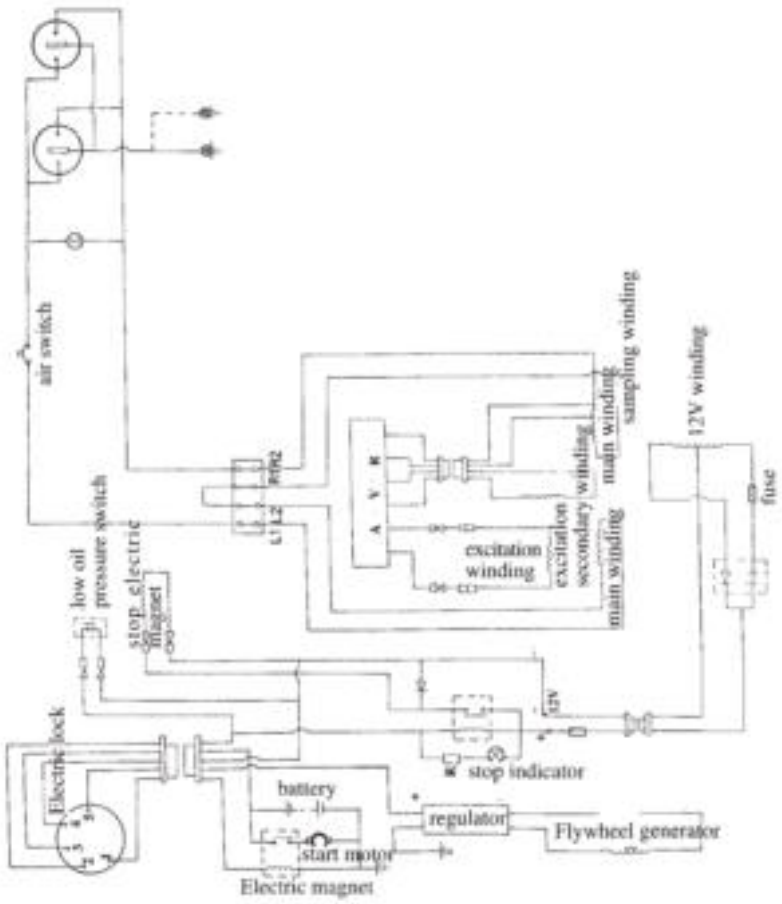

<5> E type electric wiring diagram (double voltage output)

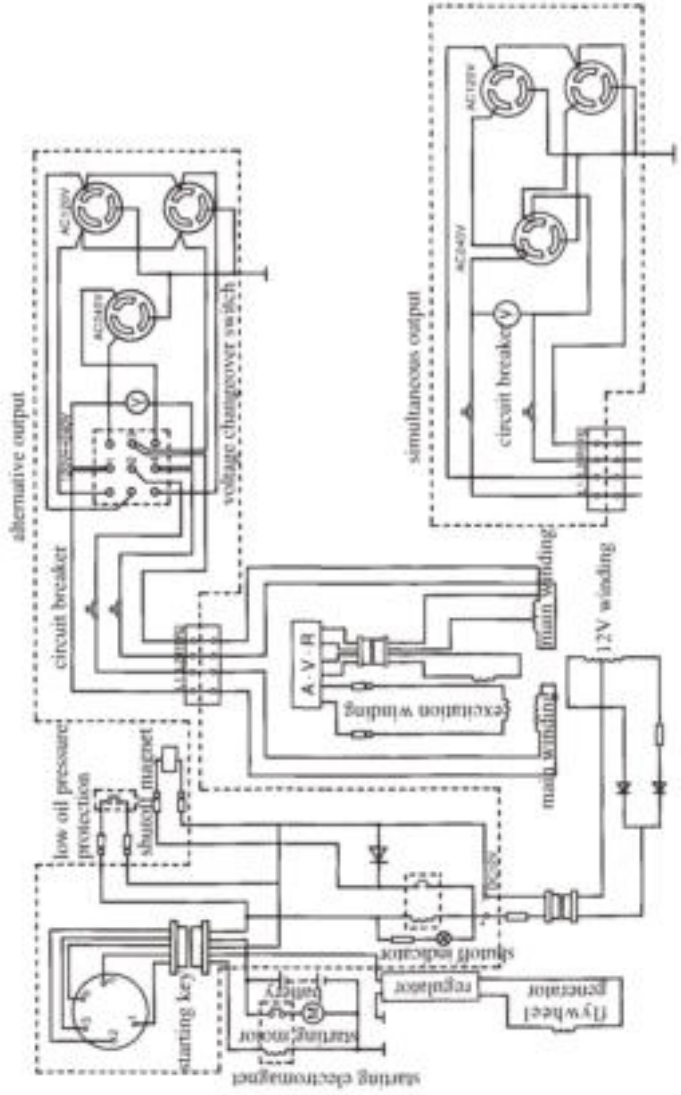

<6> T type electric wiring diagram

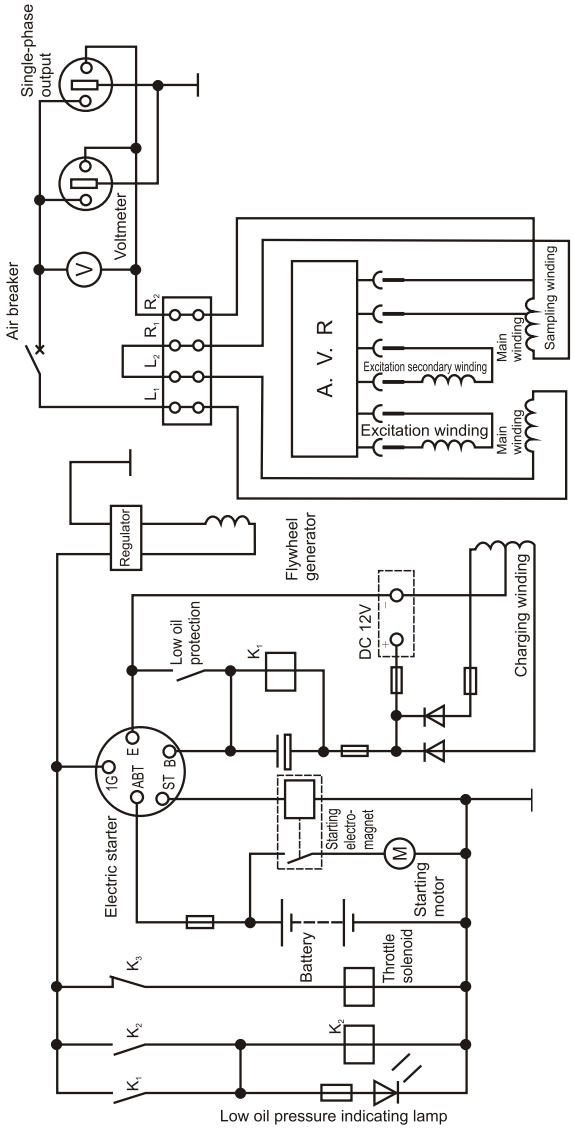

<7> X3, E3 type electric principle diagram

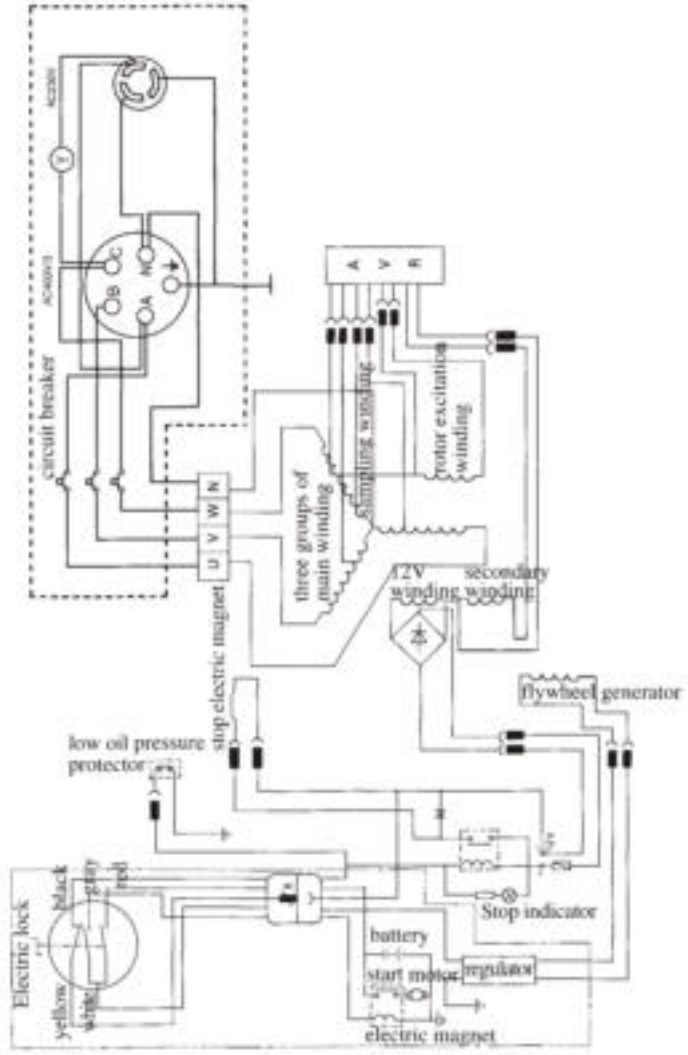

Description: For set X3 type, the components in the two-point-and-line box are not mounted.

<8> T3 type electric principle diagram

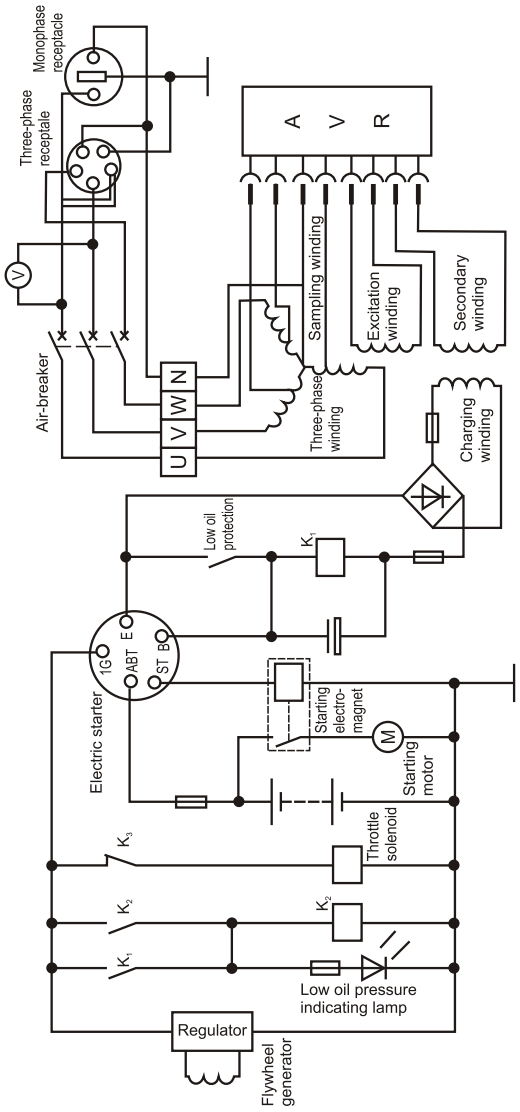

11. APPENDIX

1. The choice of the electric cable

The choice of the electric cable depends on the allowable current of the cable and the distance between the load and the generator. And the cable section should be big enough.
If the current in the cable is bigger than the allowable current, it will become over hot and the cable will be burnt. If the cable is long and thin, the input voltage of the electric appliance will be not enough, causing that the generator doesn't start.
In the following formula, you can calculate the value of the potential "e".

$$\text{Potential (v)} = \frac{1}{58} \times \frac{\text{Length}}{\text{Section area}} \times \text{Current (A)} \times \sqrt{3}$$

The relations among of the allowable current, and length, section of the Insulating cable (single core, multi-core) are as follow:
(Presume that the use voltage is 220V and the potential is below 10V.

The application of the single-core insulating cable section mm^2

Current \ Length beneath	50m	75m	100m	125	150	200
50A	8	14	22	22	30	38
100A	22	30	38	50	50	60
200A	60	60	60	80	100	125
300A	100	100	100	125	150	200

The application of the multi-core insulating cable section mm^2

Current \ Length beneath	50m	75m	100m	125	150	200
50A	14	14	22	22	30	38
100A	38	38	38	50	50	60
200A	38×2	38×2	38×2	50×2	50×2	50×2
300A	60×2	60×2	60×2	60×2	80×2	100×2

2. Modified coefficient table of ambient condition power

The conditions of generator rated output:

Altitude: 0 m Ambient temperature: 25℃ Relative humidity: 30%

Ambient modified coefficient: C (Relative humidity 30%)

Altitude (m)	Ambient temperature (℃)				
	25	30	35	40	45
0	1	0.98	0.96	0.93	0.90
500	0.93	0.91	0.89	0.87	0.84
1000	0.87	0.85	0.82	0.80	0.78
2000	0.75	0.73	0.71	0.69	0.66
3000	0.64	0.62	0.6	0.58	0.56
4000	0.54	0.52	0.5	0.48	0.46

Note: When the relative humidity is 60%, the modified coefficient is C-0.01

When the relative humidity is 80%, the modified coefficient is C-0.02

When the relative humidity is 90%, the modified coefficient is C-0.03

When the relative humidity is 100%, the modified coefficient is C-0.04

Counting example:

When the rated power of generator is P_N =5KW, altitude is 1000m, ambient temperature is 35℃, relative humidity is 80%, the rated power of generator is: $P=P_N \times (C-0.02) = 5 \times (0.82-0.02) = 4KW$